Ecodora Srl
Via Marangoni 33, 36022
S. Zeno di Cassola (VI) Italy
Tel. +39 0424 570891 / +39 0424 571230
info@ecodora.com

P/N 0E2A4/2677SSI

Diaphragm pump in polypropylene series PPB-1 with 1" flanges, membranes and balls in Santoprene™ and seats in AISI 316 stainless steel



SECTORS OF USE

Agriculture, Automotive, Building and road construction, Industry, Mining, Lube trucks and transports

FEATURES

Ratio	1:1
Flow rate	145 l/min
Max pressure	8 bar
Max cicles per minute	270 cpm
Delivery per cicles	0,540 l
Max suction lift	dry column 5 m - wet column 7,5 m
Max size pumpable solids	3 mm
Max working temperature	65 °C
Noise level	78 dB
Max air consumption	1,1 m³/min
Air working pressure	2÷6 bar
Air inlet connection	G 3/8" (f)
Air outlet connection (muffler)	G 3/4" (f)
Fluid inlet connection	ANSI 150 - DIN PN 10 - JIS 10K 1" (25 mm) proneness to G 1.1/4" (f) thread

OVERALL DIMENSIONS (mm)

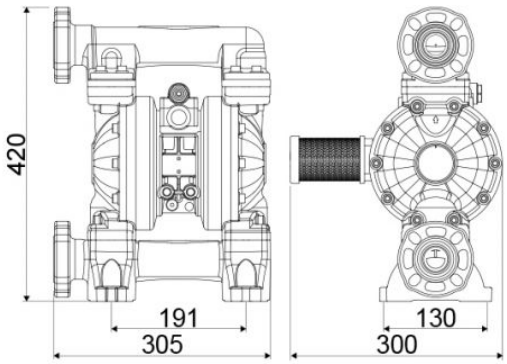

Fluid outlet connection	ANSI 150 - DIN PN 10 - JIS 10K 1" (25 mm) proneness to G 1.1/4" (f) thread
Balls for inlet	ball valve
Membranes	Santoprene™
Balls	Santoprene™
Seats	AISI 316 stainless steel
Packing	No. 1 - 0,030 m³
Gross weight	9,6 kg