Ecodora Srl
Via Marangoni 33, 36022
S. Zeno di Cassola (VI) Italy
Tel. +39 0424 570891 / +39 0424 571230
info@ecodora.com

P/N 0E2A7/2677EAI

Diaphragm pump in polypropylene series PPB-1 with dual inlet, 1" flanges, membranes in EPDM, balls in acetal and seats in AISI 316 stainless steel



SECTORS OF USE

Agriculture, Automotive, Building and road construction, Industry, Mining, Lube trucks and transports

FEATURES

Ratio	1:1
Flow rate	145 l/min
Max pressure	8 bar
Max cicles per minute	270 cpm
Delivery per cicles	0,540 l
Max suction lift	dry column 5 m - wet column 7,5 m
Max size pumpable solids	3 mm
Max working temperature	65 °C
Noise level	78 dB
Max air consumption	1,1 m³/min
Air working pressure	2÷6 bar
Air inlet connection	G 3/8" (f)
Air outlet connection (muffler)	G 3/4" (f)
Fluid inlet connection	dual inlet ANSI 150 - DIN PN 10 - JIS 10K 1" (25 mm) proneness to G 1.1/4" (f) thread

OVERALL DIMENSIONS (mm)

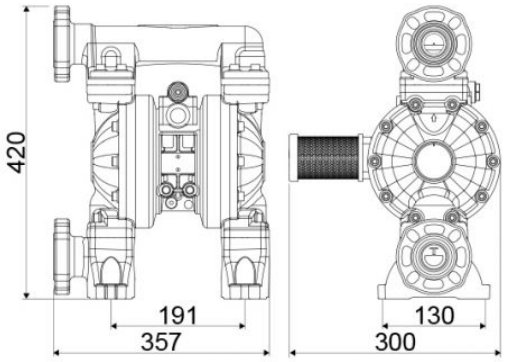

Fluid outlet connection	ANSI 150 - DIN PN 10 - JIS 10K 1" (25 mm) proneness to G 1.1/4" (f) thread
Balls for inlet	ball valve
Membranes	EPDM
Balls	acetal
Seats	AISI 316 stainless steel
Packing	No. 1 - 0,030 m^3
Gross weight	9,6 kg