Ecodora Srl
Via Marangoni 33, 36022
S. Zeno di Cassola (VI) Italy
Tel. +39 0424 570891 / +39 0424 571230
info@ecodora.com

P/N 0E2A8/1677EA5

Diaphragm pump in polypropylene series PPB-12 with dual inlet/multi ported outlet, membranes in EPDM, balls in acetal and seats in AISI 316 stainless steel and polypropylene



SECTORS OF USE

Agriculture, Automotive, Building and road construction, Industry, Mining, Lube trucks and transports

FEATURES

Ratio	1:1
Flow rate	65 l/min
Max pressure	8 bar
Max cicles per minute	350 cpm
Delivery per cicles	0,188 l
Max suction lift	dry column 4,5 m - wet column 7,5 m
Max size pumpable solids	1,5 mm
Max working temperature	65 °C
Noise level	76 dB
Max air consumption	0,89 m³/min
Air working pressure	2÷6 bar
Air inlet connection	G 3/8" (f)
Air outlet connection (muffler)	G 3/4" (f)
Fluid inlet connection	dual inlet G 3/4" (f)
Fluid outlet connection	G 1/2" (f)
Balls for inlet	cylindrical ball valve

OVERALL DIMENSIONS (mm)

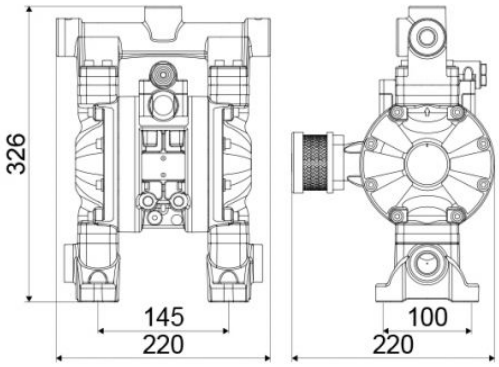

Membranes	EPDM
Balls	acetal
Seats	polypropylene and AISI 316 stainless steel
Packing	No. 1 - 0,020 m³
Gross weight	5,8 kg